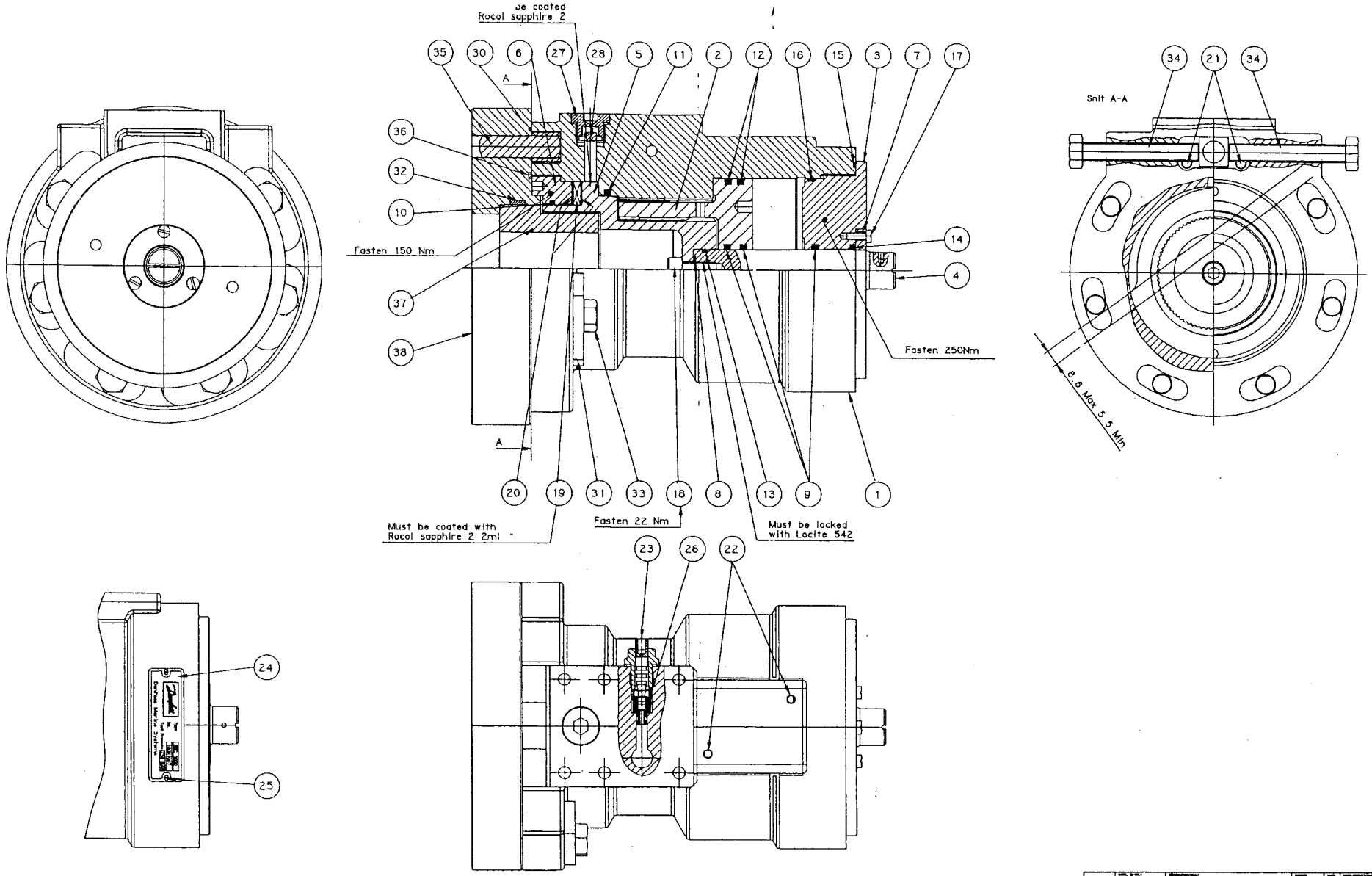

			0	010208	HGL
				010417	UHC HGL
			5462	010818	HGL HGL

1:1

160N1007 KG

Danfoss

DANFOSS SYSTEM
HYDRAULIK-A/S

ASSEMBLY DRAWING
BRC 1000

/ 160N9048