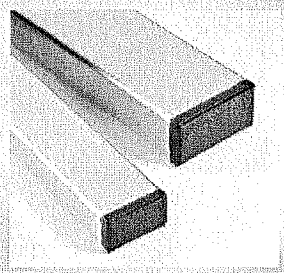

GPN 270

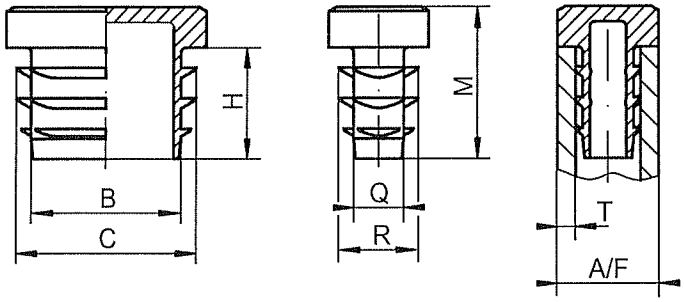

1/1V 208016.003

▶ Fortsetzung von Seite 26

Rechteckstopfen GPN 270

für Profilrohre, Presssitz durch ausgeprägte Lamellen.

Hochwertige Optik durch genarbte Kopfoberfläche und seitliche Fase.

Material: Polyethylen (PE-LLD)
Farbe: schwarz, Maße in mm.
Weitere Abmessungen sowie hitzebeständige Ausführungen und Sonderanfertigungen auf Anfrage. Vergleiche „Werkstoffe und Farben" Seite 10.

Anwendbar für Rohrmaße		Maße						Bestell-Nr.
Außen A / F	Wandstärke T	B	C	H	M	Q	R	
60 x 20	1,5 - 2	54,0	58,0	14,0	19,0	14,0	18,0	270 R 6020 1,5 - 2
60 x 30	1,5 - 2	54,0	58,0	14,0	19,0	24,0	28,0	270 R 6030 1,5 - 2
60 x 30	3	52,0	56,0	14,0	19,0	22,0	26,0	270 R 6030 3
60 x 40	1,5 - 2	54,0	58,0	14,0	19,0	34,0	38,0	270 R 6040 1,5 - 2
60 x 40	4	50,0	54,0	14,0	19,0	30,0	34,0	270 R 6040 4
60 x 40	5	48,0	52,0	14,0	19,0	28,0	32,0	270 R 6040 5
70 x 30	1,5 - 2	63,0	68,0	17,0	22,0	23,0	28,0	270 R 7030 1,5 - 2
70 x 40	1,5 - 2	63,0	68,0	17,0	22,0	33,0	38,0	270 R 7040 1,5 - 2
70 x 40	4	59,0	64,0	17,0	22,0	29,0	34,0	270 R 7040 4
80 x 20	1,5 - 2	73,0	78,0	17,0	22,0	13,0	18,0	270 R 8020 1,5 - 2
80 x 30	1,5 - 2	73,0	78,0	17,0	22,0	23,0	28,0	270 R 8030 1,5 - 2
80 x 40	1,5 - 2	73,0	78,0	17,0	22,0	33,0	38,0	270 R 8040 1,5 - 2
80 x 40	4	69,0	74,0	17,0	22,0	29,0	34,0	270 R 8040 4
80 x 40	5	67,0	72,0	17,0	22,0	27,0	32,0	270 R 8040 5
80 x 50	1,5 - 2	73,0	78,0	17,0	22,0	43,0	48,0	270 R 8050 1,5 - 2
80 x 50	4	69,0	74,0	17,0	22,0	39,0	44,0	270 R 8050 4
80 x 60	3	71,0	76,0	17,0	22,0	51,0	56,0	270 R 8060 3
80 x 60	5	67,0	72,0	17,0	22,0	47,0	52,0	270 R 8060 5
100 x 40	1,5 - 2	93,0	98,0	17,0	22,0	33,0	38,0	270 R 10040 1,5 - 2
100 x 40	3	91,0	96,0	17,0	22,0	31,0	36,0	270 R 10040 3
100 x 50	3	91,0	96,0	17,0	22,0	41,0	46,0	270 R 10050 3
100 x 50	4	89,0	94,0	17,0	22,0	39,0	44,0	270 R 10050 4
100 x 50	5	87,0	92,0	17,0	22,0	37,0	42,0	270 R 10050 5
120 x 40	3	111,0	116,0	17,0	22,0	31,0	36,0	270 R 12040 3
120 x 60	3	111,0	116,0	17,0	22,0	51,0	56,0	270 R 12060 3
120 x 60	4	109,0	114,0	17,0	22,0	49,0	54,0	270 R 12060 4
120 x 60	5	107,0	112,0	17,0	22,0	47,0	52,0	270 R 12060 5
120 x 80	1,5 - 2	113,0	118,0	17,0	22,0	73,0	78,0	270 R 12080 1,5 - 2
140 x 80	4	129,0	134,0	17,0	22,0	69,0	74,0	270 R 14080 4

▶ weitere Abmessungen auf Seite 26